SAMSUNG CONFIDENTIAL
THIS DOCUMENT CONTAINS CONFIDENTIAL
PROPRIETARY INFORMATION THAT IS
SAMSUNG ELECTRONICS CO'S PROPERTY.
DO NOT DISCLOSE TO OR DUPLICATE FOR OTHERS
EXCEPT AS AUTHORIZED BY SAMSUNG.

SM-M136B REV03

NonNFC 4G/64GB 2022.05.13

sheet01 : GSM / WCDMA / LTE / 5G sub6 RF
sheet02 : N78 DRX
sheet03 : APT, TRANCEIVER
sheet04 : SENSORS,CONNECTIVITY
sheet05 : AP(MT6833)
sheet06 : PMIC(Main,IF), KEY, MOTOR, UFS
sheet07 : AUDIO, SD/SIM, SHIELD CAN, IF CON
sheet08 : CAMERA, DISPLAY

SAMSUNG CONFIDENTIAL
THIS DOCUMENT CONTAINS CONFIDENTIAL
AND PROPRIETARY INFORMATION OF
SAMSUNG ELECTRONICS CO'S PROPERTY.
DO NOT DISCLOSE TO OR DUPLICATE FOR OTHERS
EXCEPT AS AUTHORIZED BY SAMSUNG.

RF PART 1

MAIN ANT1
LB TRX

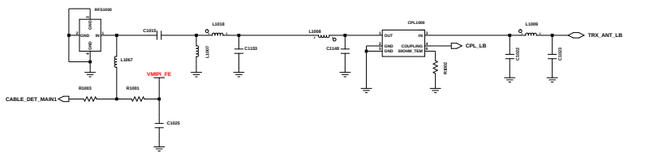

LMB FEMID

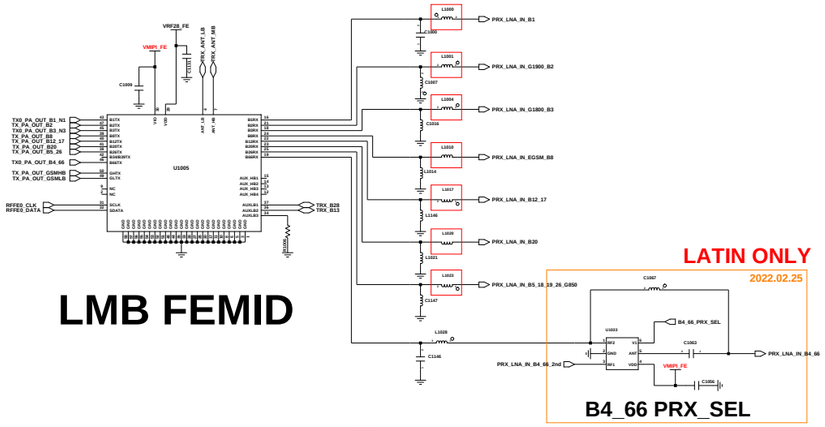

PRX LNA BANK

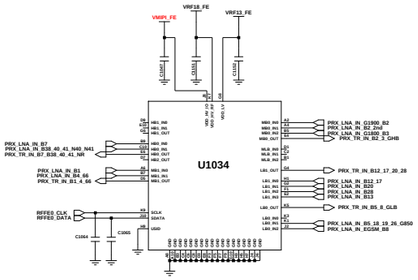

MAIN ANT2
MB/HB TRX

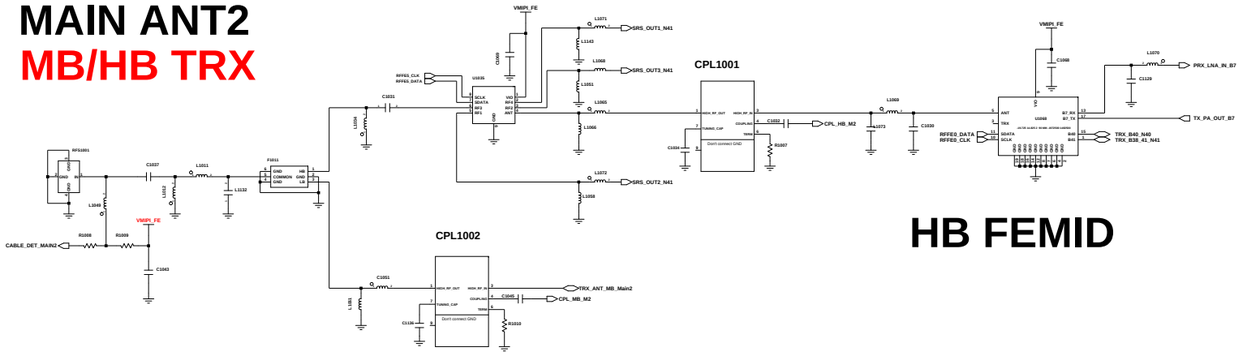

HB FEMID

LATIN ONLY
2022.02.25

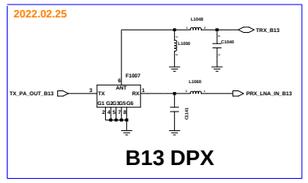

B13 DPX

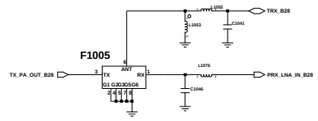

B28_DPX

LATIN ONLY
2021.11.01

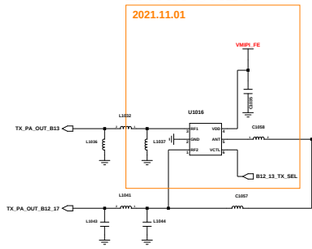

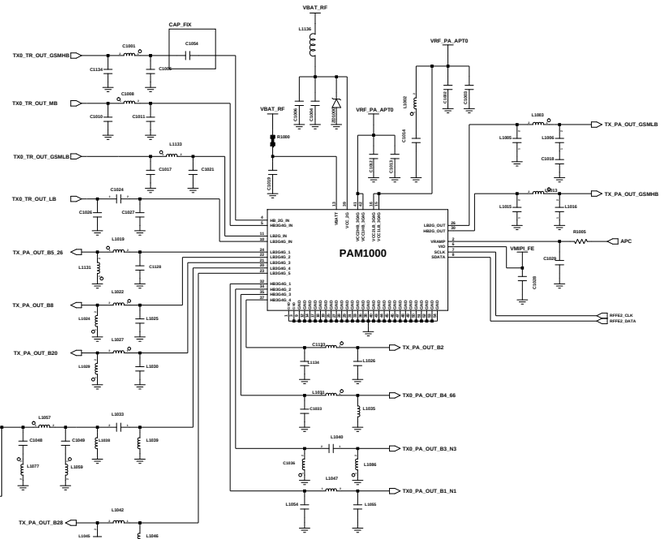

2G/LMB MMMB (TX0)

MAIN ANT3
N1/N3/N66 TRX (for M-M/M-H ENDC)

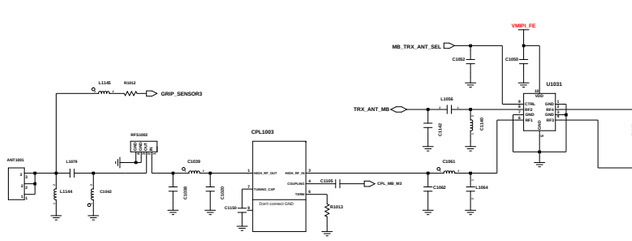

MB_TRX_ANT_SEL

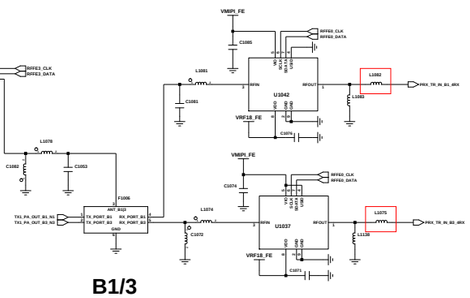

B1/3

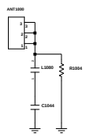

MHB MMMB(TX1)

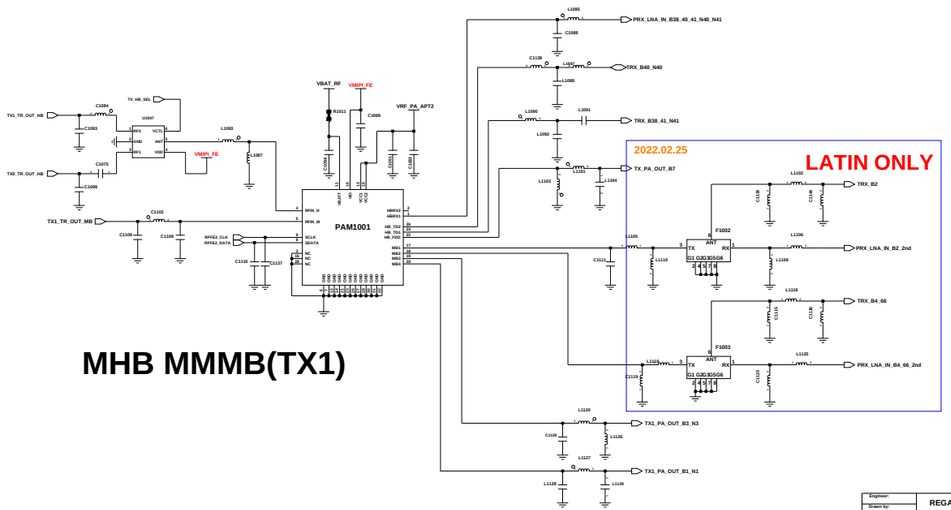

Engineer:	REGACY RF, N41,N79 TRX
Drawn by:	
R&D CSR:	TITLE:
DOC CTRL CHK:	
MFG ENGR CHK:	
QA CHK:	REV: / Drawing Number: / Page:

Changed by: | Date Changed: | Time Changed:

SAMSUNG CONFIDENTIAL
THIS DOCUMENT CONTAINS CONFIDENTIAL PROPRIETARY INFORMATION THAT IS SAMSUNG ELECTRONICS CO'S PROPERTY. DO NOT DISCLOSE TO OR DUPLICATE FOR OTHERS EXCEPT AS AUTHORIZED BY SAMSUNG.

SUB ANT1

DRX_L/M/H

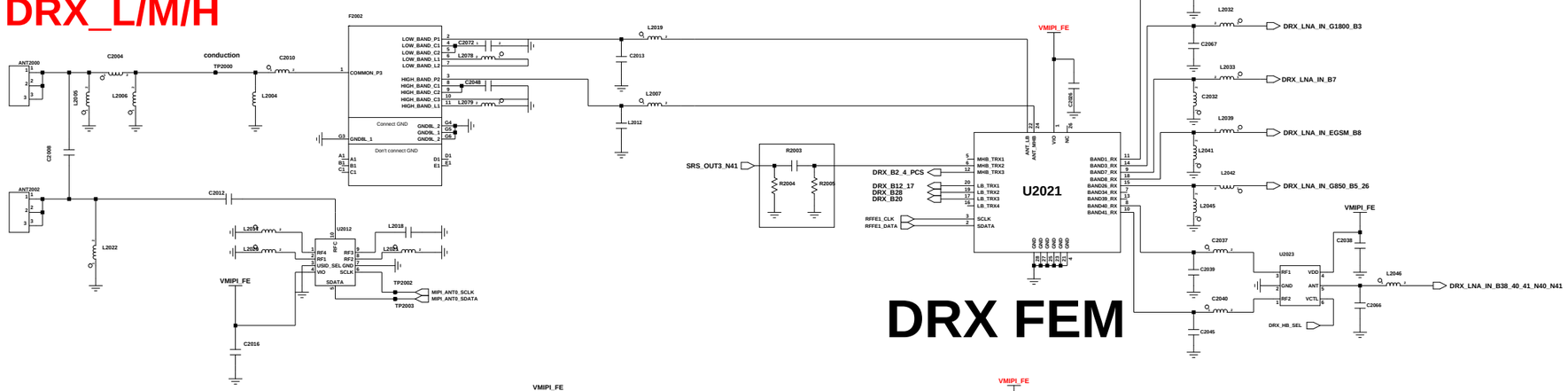

DRX FEM

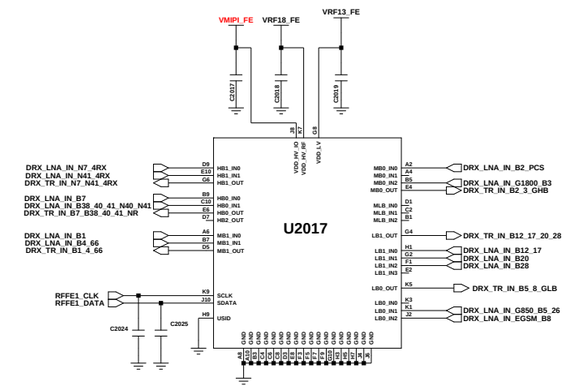

DRX LNA BANK

SUB ANT2

N7/N41 PRX MIMO
N78 PRX MIMO

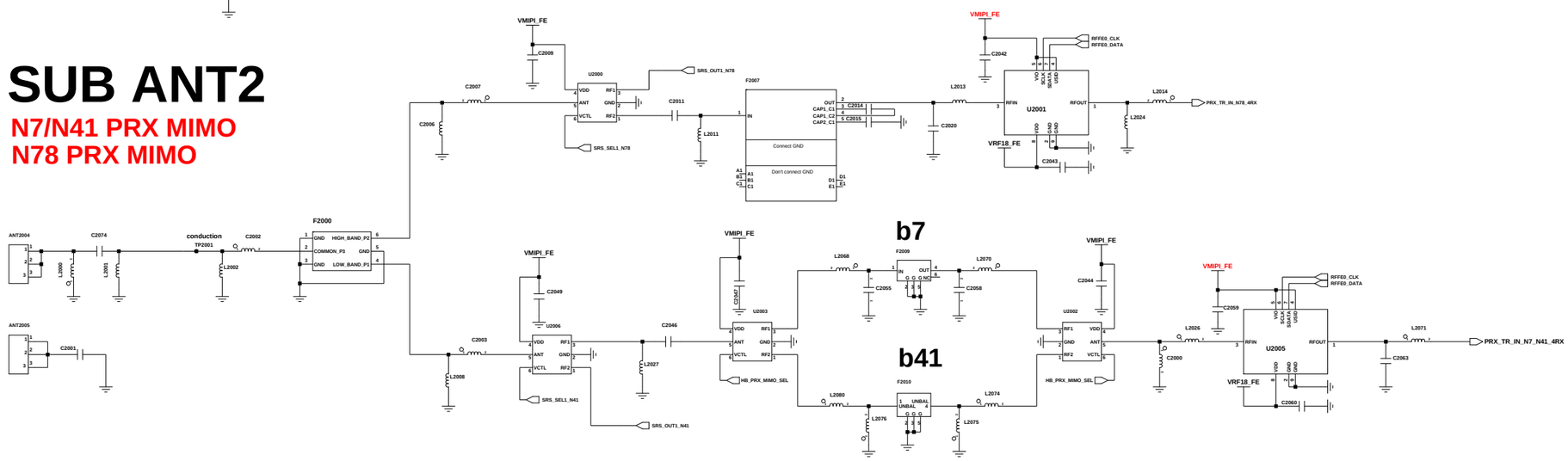

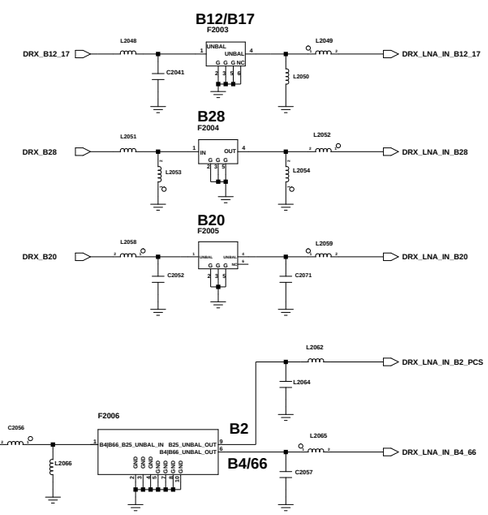

DRX filter

SUB ANT3

N78 TRX

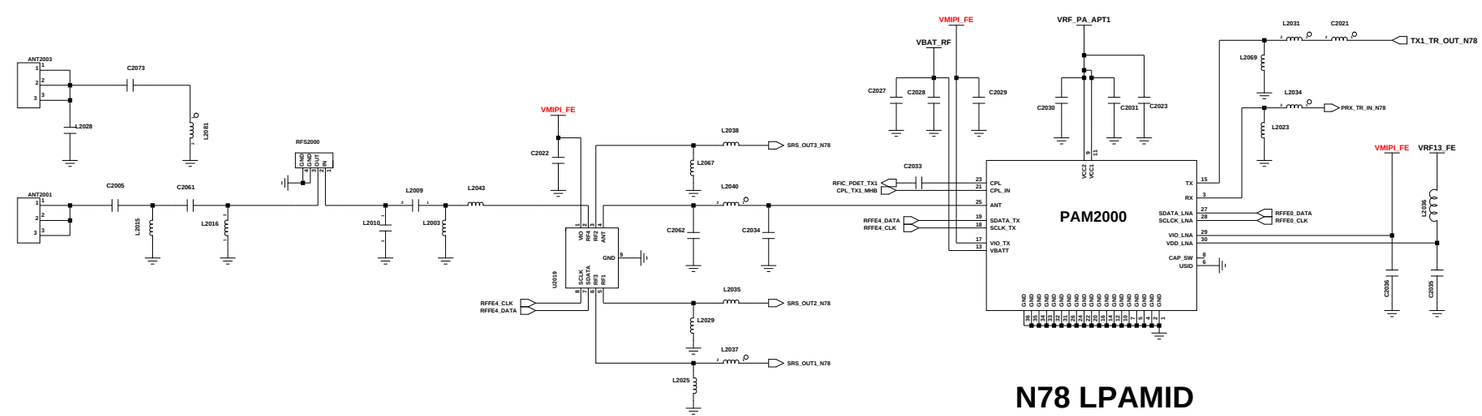

N78 LPAMID

Engineer	DRX, TRANCEIVER	
Drawn by:		
R&D CHK:	TITLE:	Size:
DOC CTRL CHK:		
MFG ENGR CHK:		
Changed by: / Date Changed: / Time Changed: / QA CHK:	Drawing Number	2/7

SAMSUNG CONFIDENTIAL
THIS DOCUMENT CONTAINS CONFIDENTIAL PROPRIETARY INFORMATION THAT IS SAMSUNG ELECTRONICS CO'S PROPERTY. DO NOT DISCLOSE TO OR DUPLICATE FOR OTHERS EXCEPT AS AUTHORIZED BY SAMSUNG.

SUB ANT5

N78 DRX
N7/N41 DRX MIMO

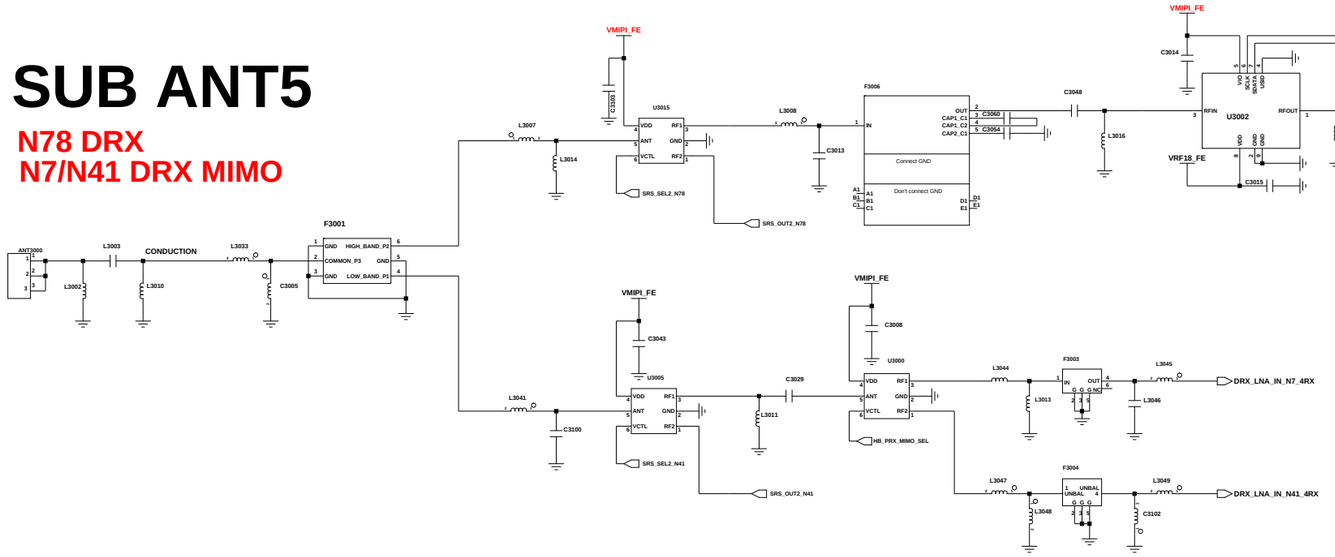

U3003-1

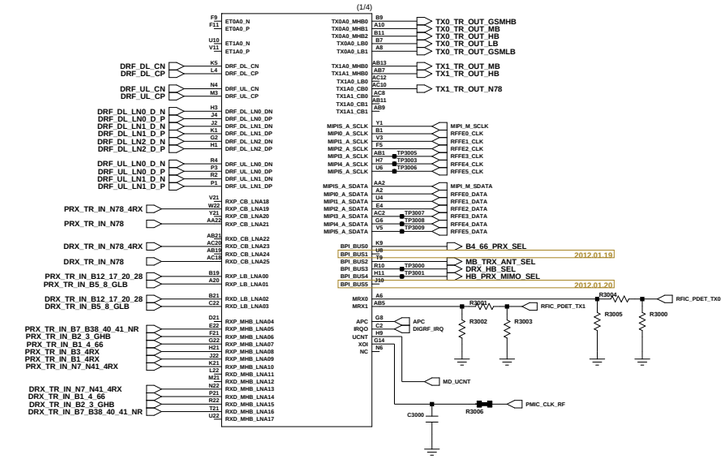

TRANCEIVER

SUB ANT4

N78 DRX MIMO

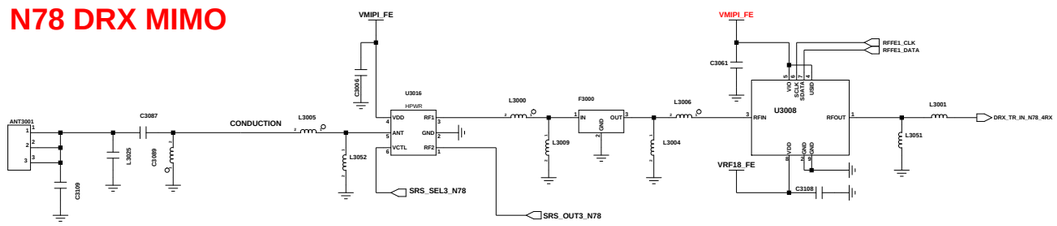

U3012

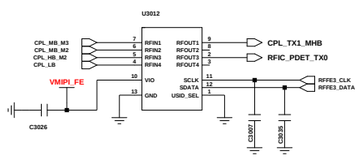

CPL TX0 TX1

NR THM

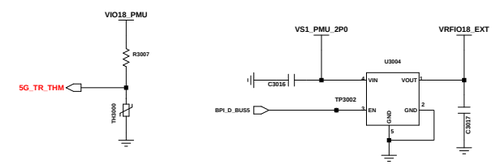

U3003-4

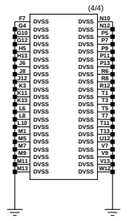

U3003-2

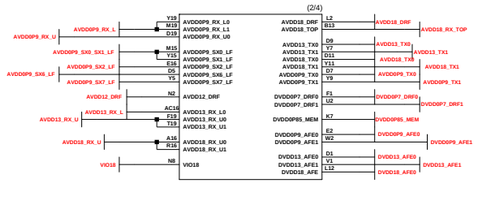

U3003-3

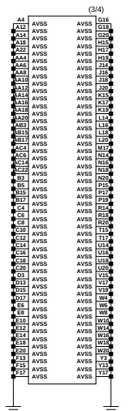

APT MODULATOR

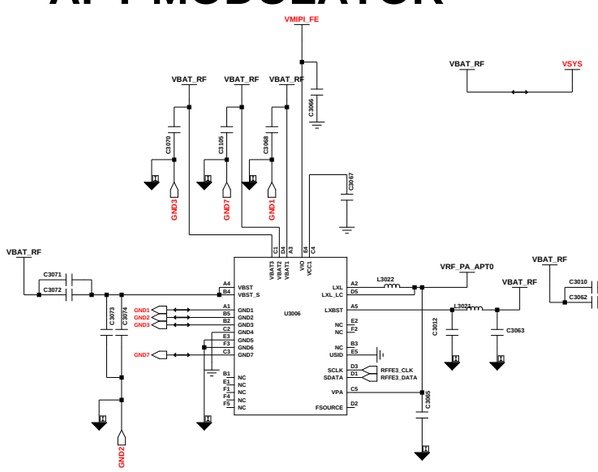

LOW

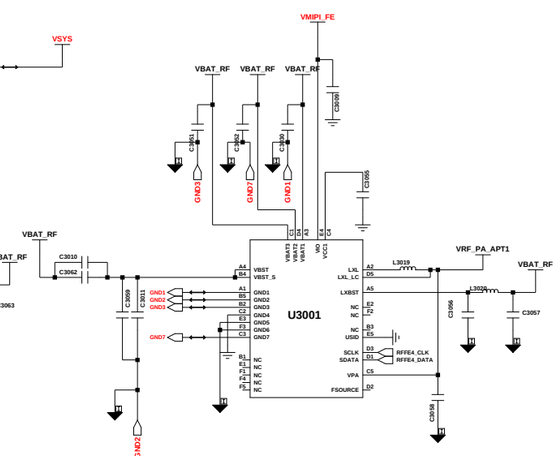

B48, N41/77/78

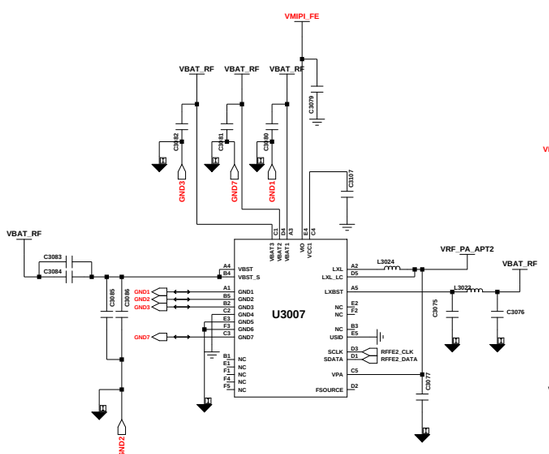

M/H

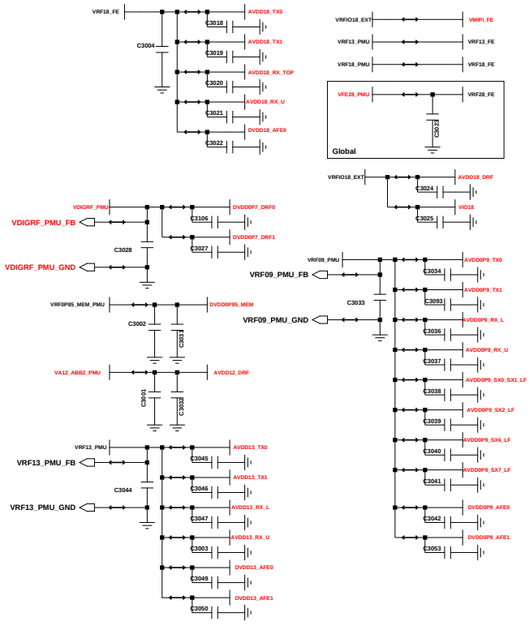

Engineer	DRX, TRANCEIVER	
Drawn by:		
R&D CHK:	TITLE:	Size:
DOC CTRL CHK:		
MFG ENGR CHK:		
Changed by: / Date Changed: / Time Changed: / QA CHK:	Drawing Number	2/7

SAMSUNG CONFIDENTIAL
THIS DOCUMENT CONTAINS CONFIDENTIAL
PROPRIETARY INFORMATION THAT IS
SAMSUNG ELECTRONICS CO'S PROPERTY.
DO NOT DISCLOSE TO OR DUPLICATE FOR OTHERS
EXCEPT AS AUTHORIZED BY SAMSUNG.

BT/WIFI GPS

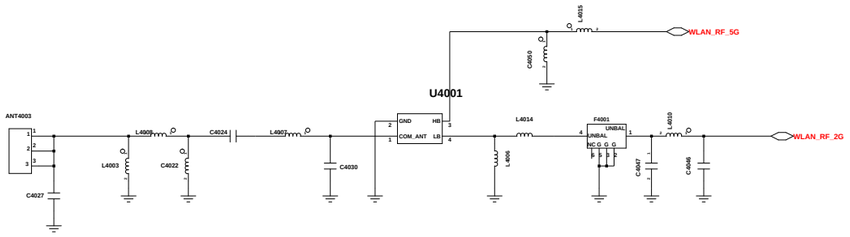

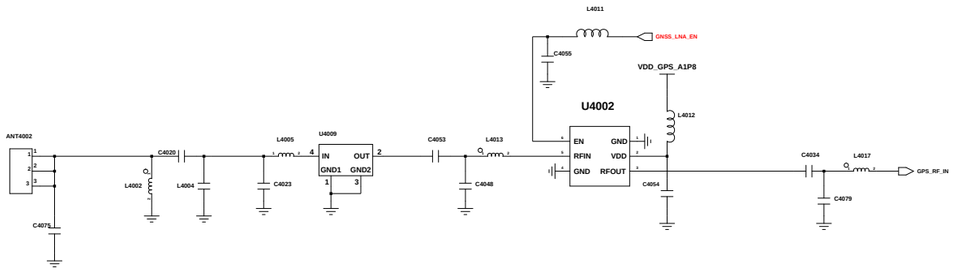

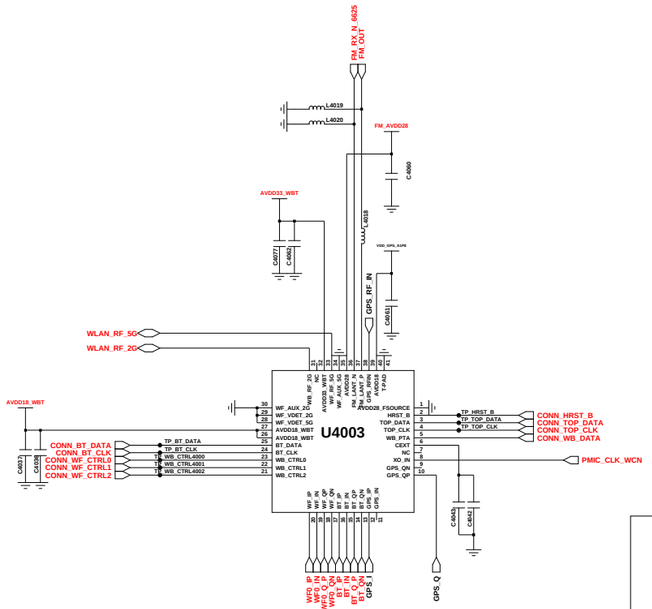

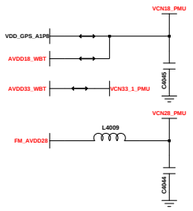

NFC

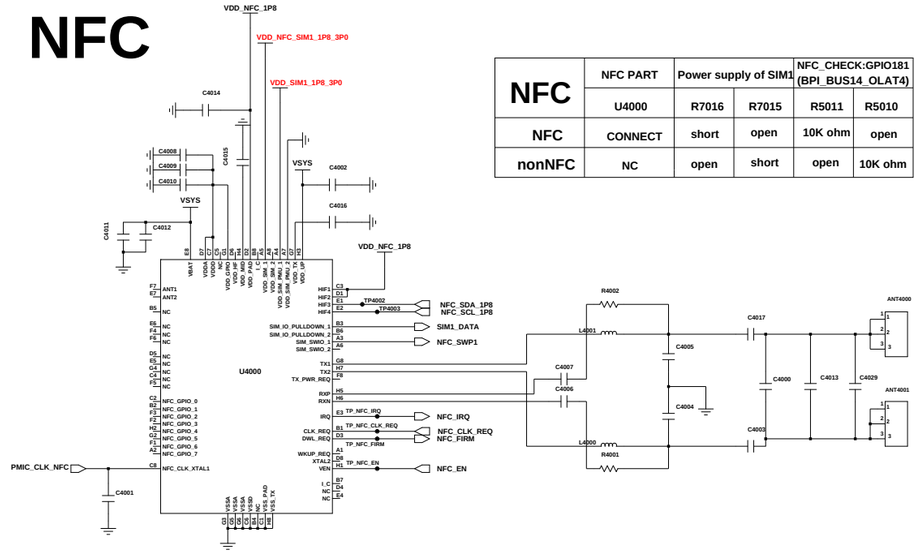

NFC	NFC PART	Power supply of SIM1		NFC_CHECK:GPIO181 (BPI_BUS14_OLAT4)	
	U4000	R7016	R7015	R5011	R5010
NFC	CONNECT	short	open	10K ohm	open
nonNFC	NC	open	short	open	10K ohm

SENSORS

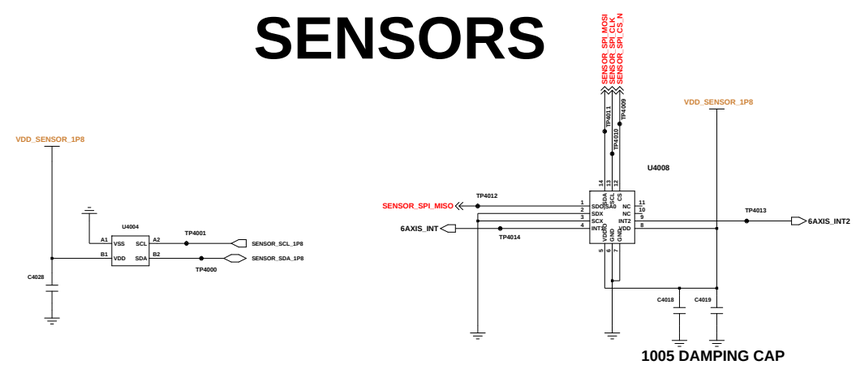

MAGNETIC

6 AXIS(ACC+GRYO)

GRIP SENSOR1

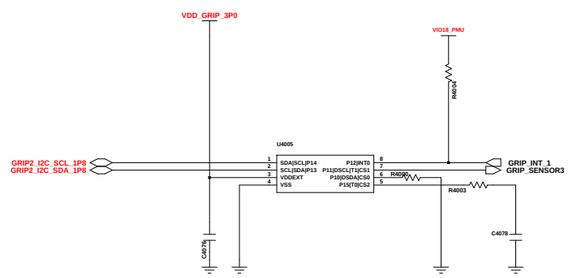

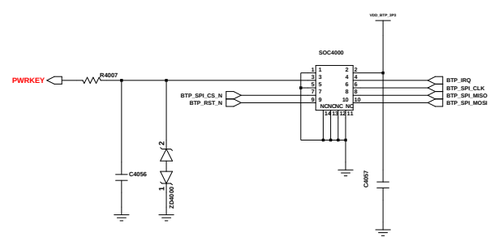

BTP

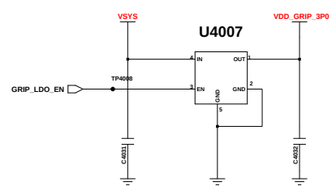

GRIP(SUB) LDO

Engineer:	SENSOR, WIFI/BT/GPS/NFC
Drawn by:	
R&D CHK:	TITLE:
DOC CTRL CHK:	
MFG ENGR CHK:	

Changed by: user93 | Date Changed: | Time Changed: | QA CHK: | REV | Drawing Number: | Page: 3/7

SAMSUNG CONFIDENTIAL
THIS DOCUMENT CONTAINS CONFIDENTIAL PROPRIETARY INFORMATION THAT IS SAMSUNG ELECTRONICS CO'S PROPERTY. DO NOT COPY OR DISCLOSE TO ANYONE OTHERS EXCEPT AS AUTHORIZED BY SAMSUNG.

MT6833

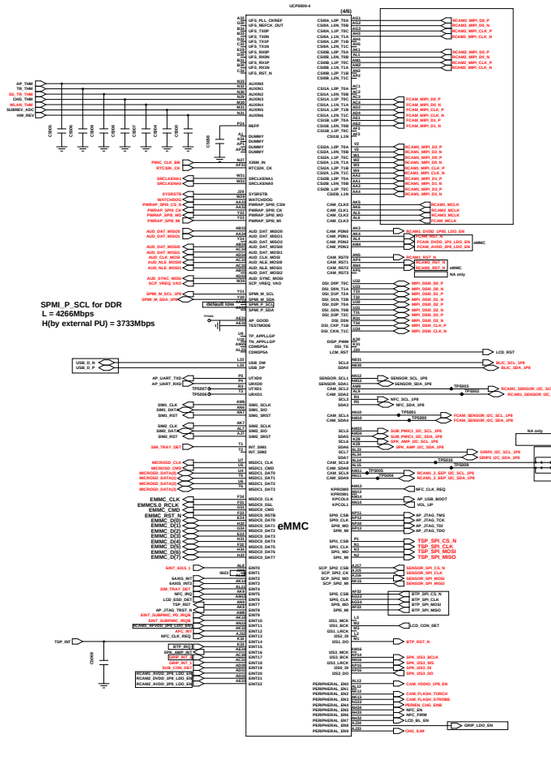

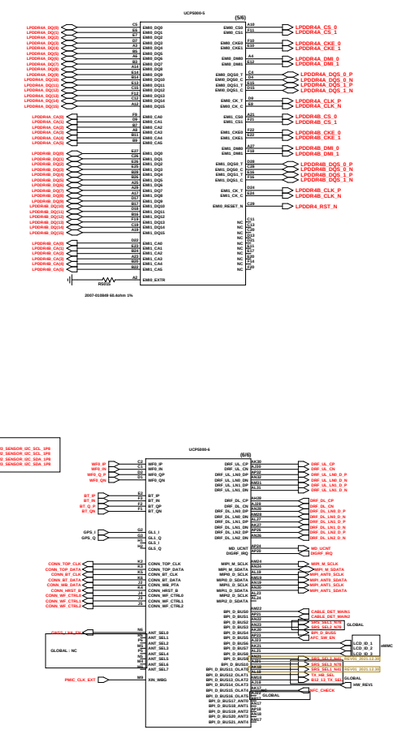

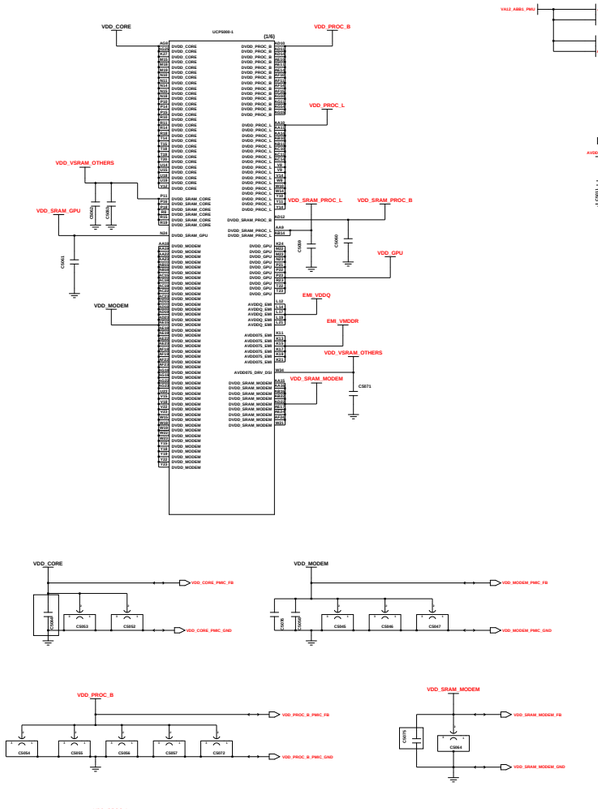

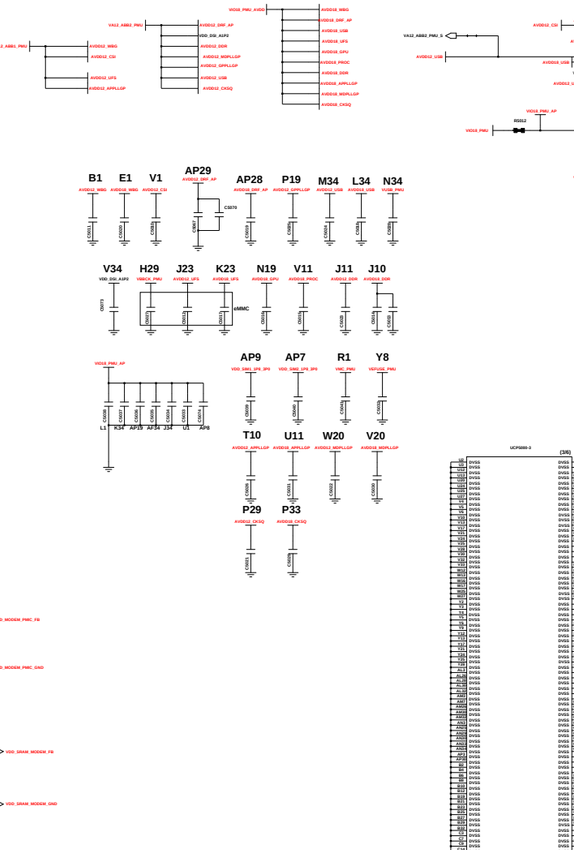

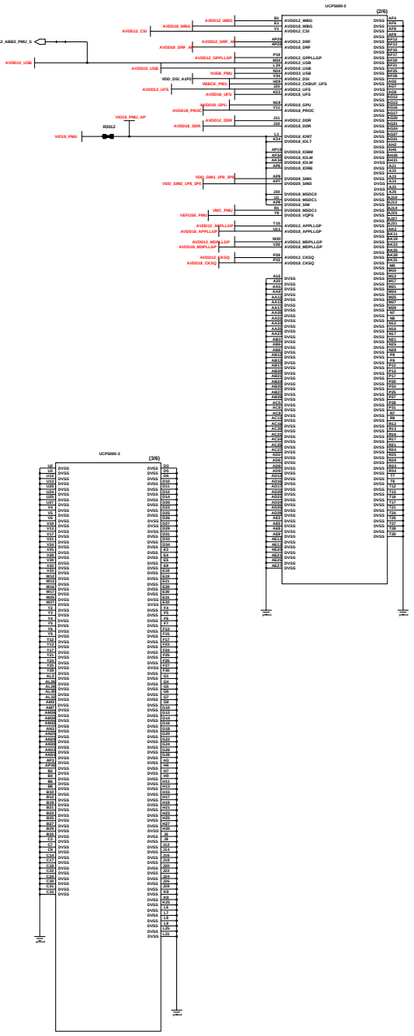

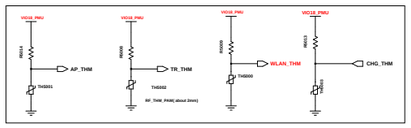

H/W ID TABLE (A136B)

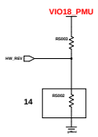

HW ID	REV	VALUE	COMMENT
00		12K	
01		20K	
02		30K	
03		43K	
04		51K	
05		68K	
06		82K	
07		100K	
08		150K	
09	0.0	200K	BringUp/PrePV
10	0.1	270K	HW
11	0.2	REV1/12K	PV1
12	0.3	REV1/20K	PV2
13	0.3	REV1/30K	PV2
14	0.3	REV1/43K	PV2

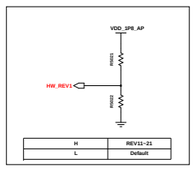

H	REV11~21
L	Default

NFC OPTION

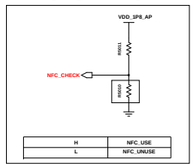

H	NFC_USE
L	NFC_UNUSE

eMCP		REGION	
R8890	4G/64G	R8891	EUR/SEA/KOR/HK/TW MEA/SWA/APR (A136B)
R8917	4G/128G	R8896	LA (A136M)
R8920	6G/128G		

PCB JTAG

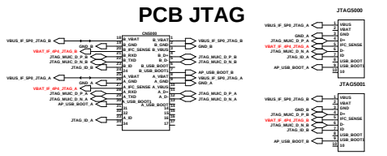

POWER OFF LEAKAG

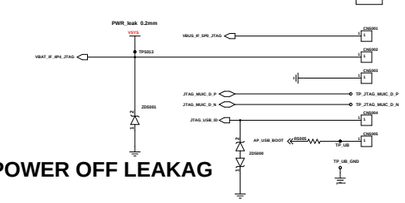

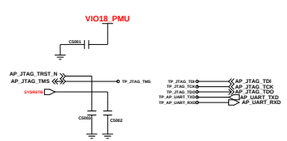

AP JTAG

Default meaning is AP internal setting, so no need external PU/PD

PWRAP_SPI0_CSN	AUD_DAT_MOSI0	AP JTAG	MODEM JTAG
H (Default)	L (Default)	N/A	N/A
H	H (by external PU)	SPI0 + EINT8	N/A
L (by external PD)	L	SPI0 + EINT8	TDM_
L (by external PD)	H (by external PU)	MSDC1_	N/A

AUD_SYNC_MOSI	AUD_NLE_MOSI0	Storage Booting
L (Default)	L (Default)	only UFS boot
L	H (by external PU)	only eMMC boot
H (by external PU)	L	Reserved MTK Debug
H (by external PU)	H (by external PU)	Reserved MTK Debug

AUD_NLE_MOSI1	USB_JTAG
L (Default)	USB 2.0
H (by external PU)	DP/DM output JTAG

AUD_DAT_MOSI1	AUD_DAT_MOSI2	DDR
L (Default)	L (Default)	LP4x-MCP
L	H (by external PU)	Reserved MTK Debug
H (by external PU)	L	Reserved MTK Debug
H (by external PU)	H (by external PU)	Reserved MTK Debug

AUD_DAT_MISO1	VEMC Voltage
L (Default)	VEMC=3.0V for UFS2.1 device
H (by external PU)	VEMC=2.5V for UFS3.0 device

Engineer:						AP	
Drawn by:							
R&D CHK:						TITLE:	Size
SQC CTSL CHK:							
MFG ENGR CHK:							
Changed by:	Date Changed:	Time Changed:	QA CHK:	REV:	Drawing Number:		Page:

PV1

SAMSUNG CONFIDENTIAL
THIS DOCUMENT CONTAINS CONFIDENTIAL PROPRIETARY INFORMATION THAT IS SAMSUNG ELECTRONICS CO'S PROPERTY. DO NOT DISCLOSE TO OR DUPLICATE FOR OTHERS EXCEPT AS AUTHORIZED BY SAMSUNG.

MAIN_PMIC

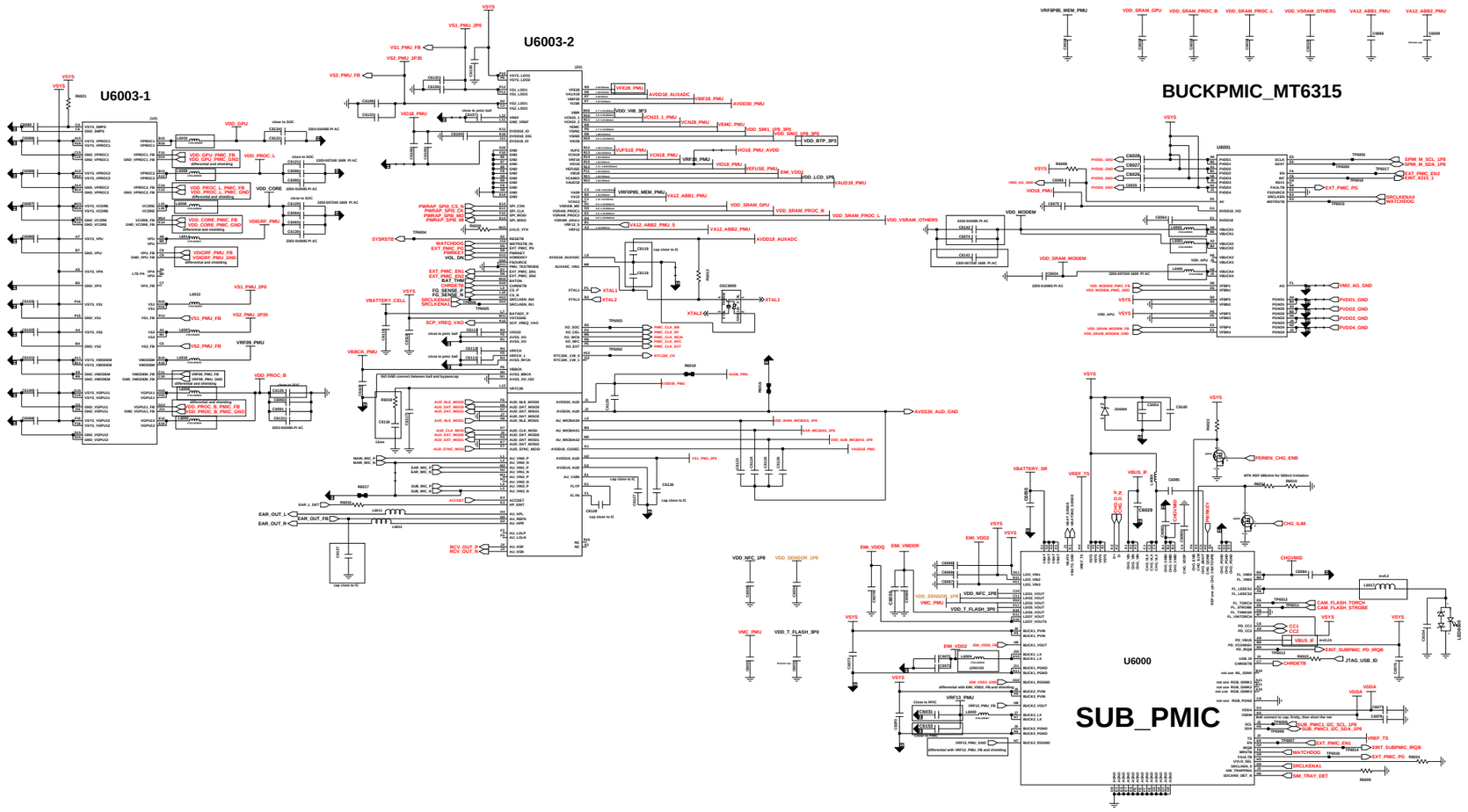

MEMORY (eMCP)

Default **4+64:1108-000712**

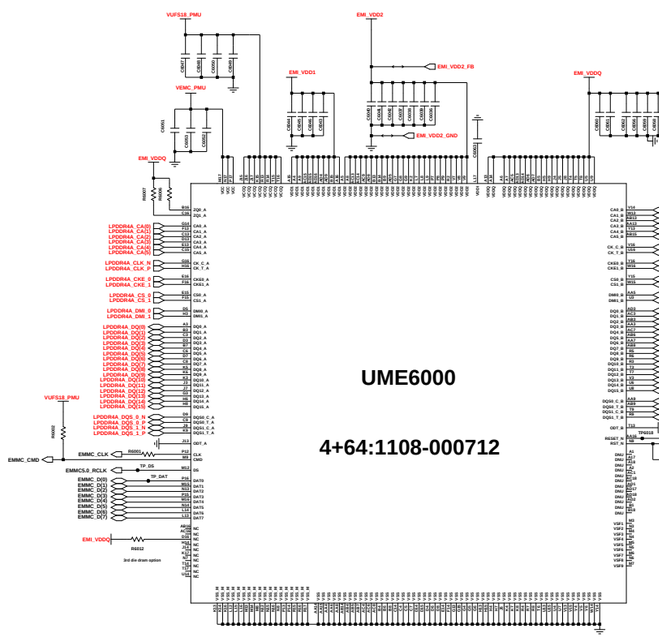

MOTOR

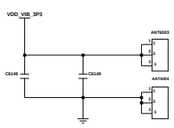

VOLUME KEY

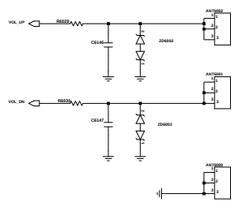

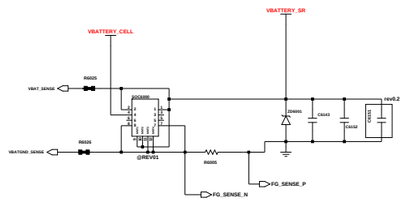

BATTERY CON

OVP CIRCUIT (FOR FAST CHARGING)

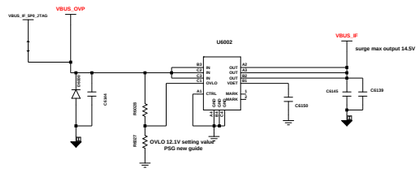

Engineer:	PMIC/IF PMIC/eMMC
Division by:	
R&D CHK:	TITLE:
DOC CTRL CHK:	
MFG ENGR CHK:	
Changed by: / Date Changed: / Time Changed: / Q/A CHK:	REV: / Drawing Number: / Page 1/1

SAMSUNG CONFIDENTIAL
THIS DOCUMENT CONTAINS CONFIDENTIAL
PROPRIETARY INFORMATION THAT IS
SAMSUNG ELECTRONICS CO'S PROPERTY.
DO NOT DISCLOSE TO OR DUPLICATE FOR OTHERS
EXCEPT AS AUTHORIZED BY SAMSUNG.

SIM / T-FLASH (3in3)

Bring Up : 3in3 A307 SIM socket

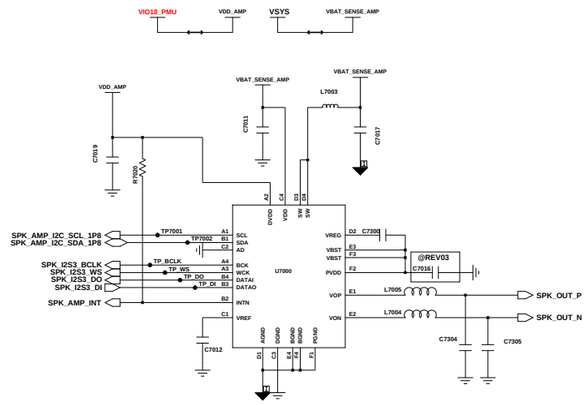

SPK AMP

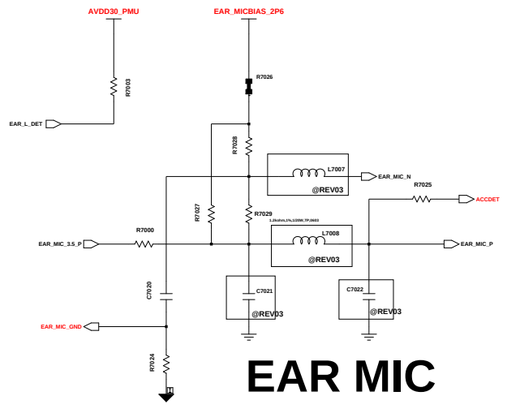

EAR MIC

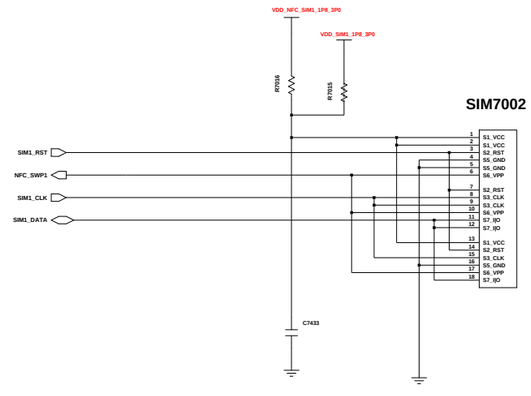

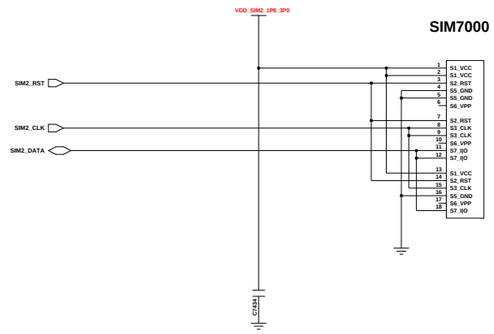

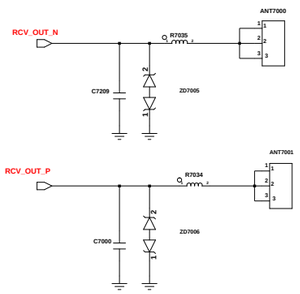

RCV CONTACT

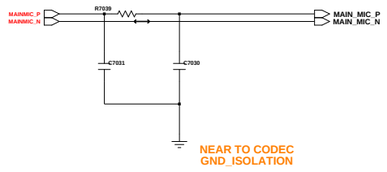

MAIN MIC

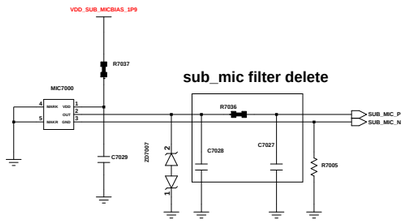

SUB MIC

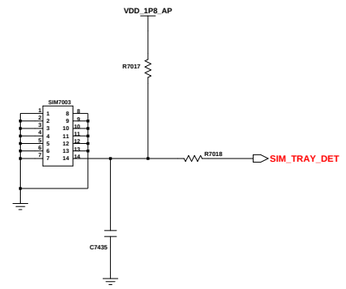

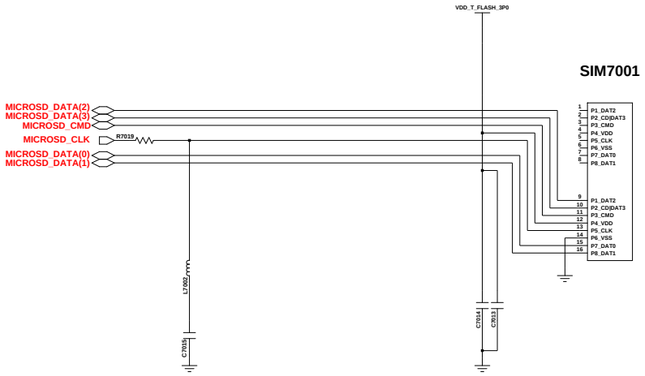

MAIN FPCB

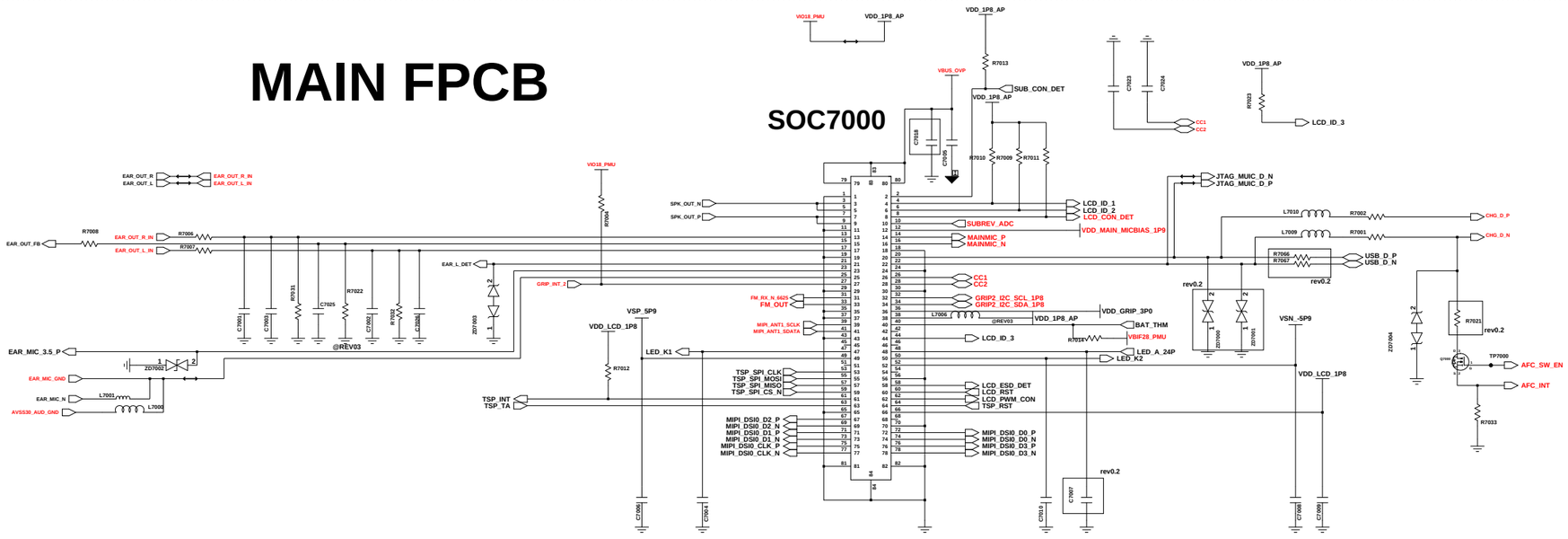

SHIELD CAN

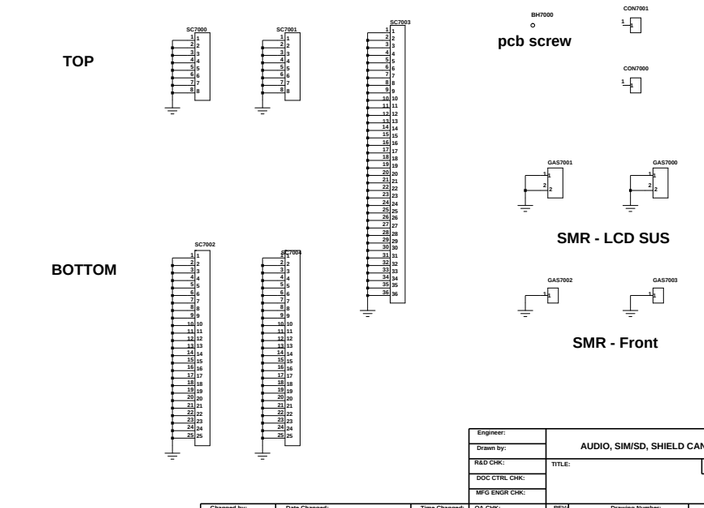

Engineer:	AUDIO, SIM/SD, SHIELD CAN
Drawn by:	
R&D CHK:	TITLE:
DOC CTRL CHK:	Size:
MFG ENGR CHK:	
QA CHK:	REV / Drawing Number: / Page:6/7

Changed by: | Date Changed: | Time Changed:

SAMSUNG CONFIDENTIAL
THIS DOCUMENT CONTAINS CONFIDENTIAL PROPRIETARY INFORMATION THAT IS SAMSUNG ELECTRONICS CO'S PROPERTY. DO NOT DISCLOSE TO OR DUPLICATE FOR OTHERS EXCEPT AS AUTHORIZED BY SAMSUNG.

CAMERA_PART

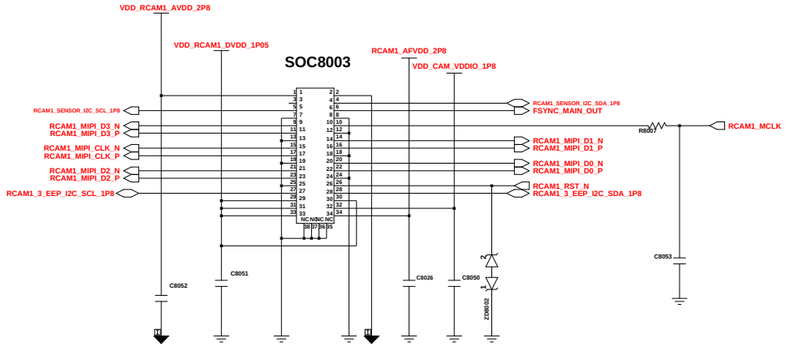

RCAM1_50M(34PIN)

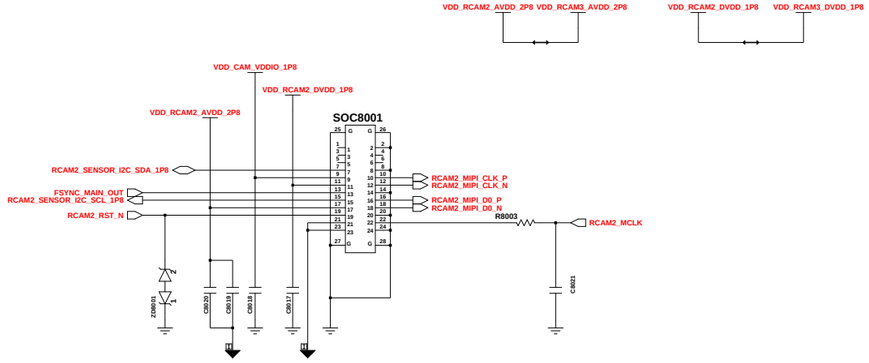

RCAM2_2M BOKEH CAMERA(24PIN)

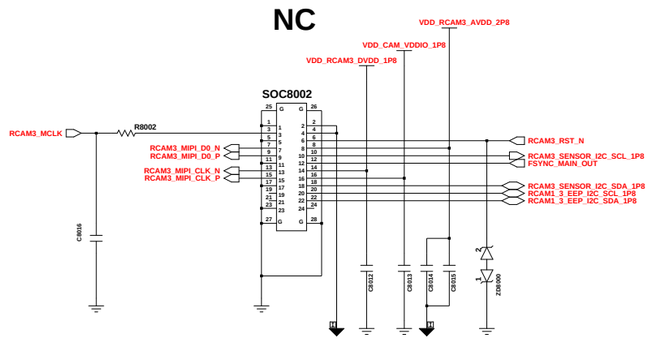

RCAM3_2M MACRO CAMERA(24PIN)

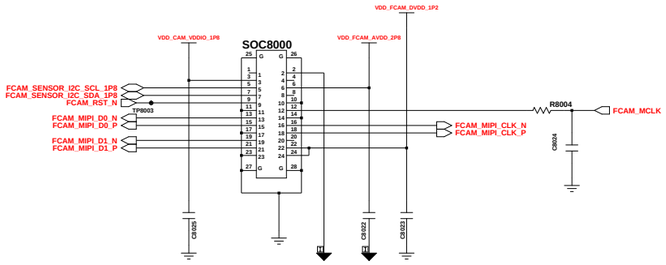

FCAM_5M(24PIN)

DISPLAY PMIC

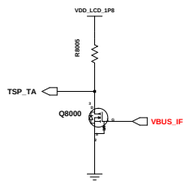

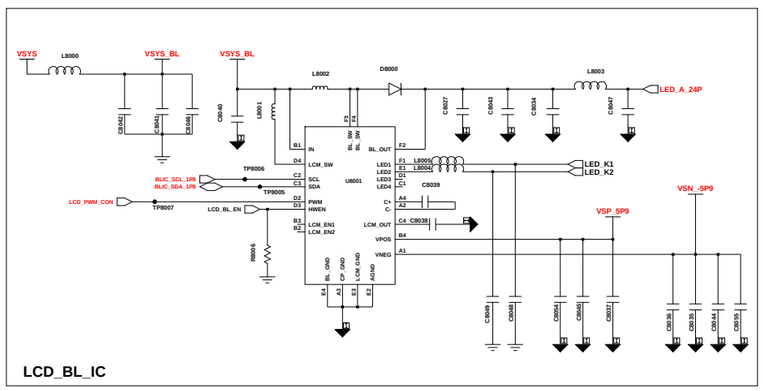

CAM PMIC

RCAM1

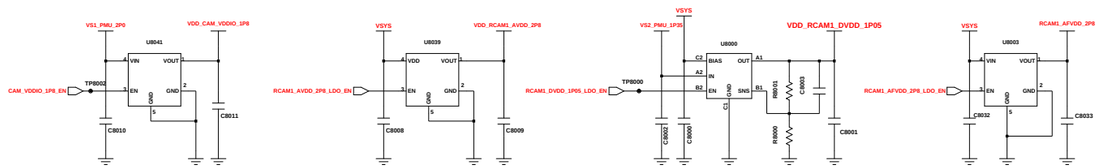

RCAM2/3

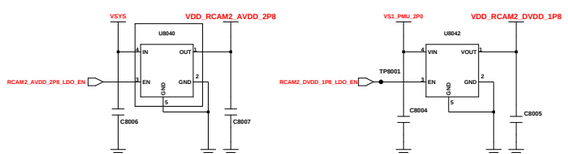

FCAM

300mA - PSG guide - new item

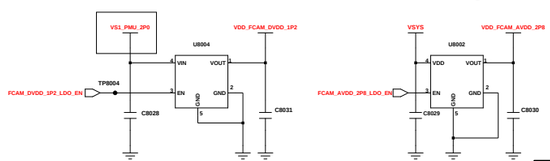

Engineer:	CAMERA, DISPLAY
Drawn by:	
R&D CHK:	TITLE:
DOC CTRL CHK:	
MFG ENGR CHK:	
QA CHK:	REV / Drawing Number: / Page: 7/7

Changed by: | Date Changed: | Time Changed:

SC7004
SC7002
SOC8001
SOC8002
SOC8000
SOC7000
SOC6000
SOC4000
U4003
U3003
U6003
U1005
PAM2000
PAM1000
PAM1001
U1068
U1034
U6001
U8001
L8002
L8001
D8000
BH7000
MIC7000
CON7001
LED6000
ANT4000
ANT4001
ANT3000
ANT2000
ANT2002
ANT2004
ANT2005
ANT4003
ANT3001
ANT4002
ANT2001
ANT2003
ANT1001
ANT1000
RFS2000
RFS2001
RFS1001
RFS1000
R6005
TP5013
ZD5001
ZD5001

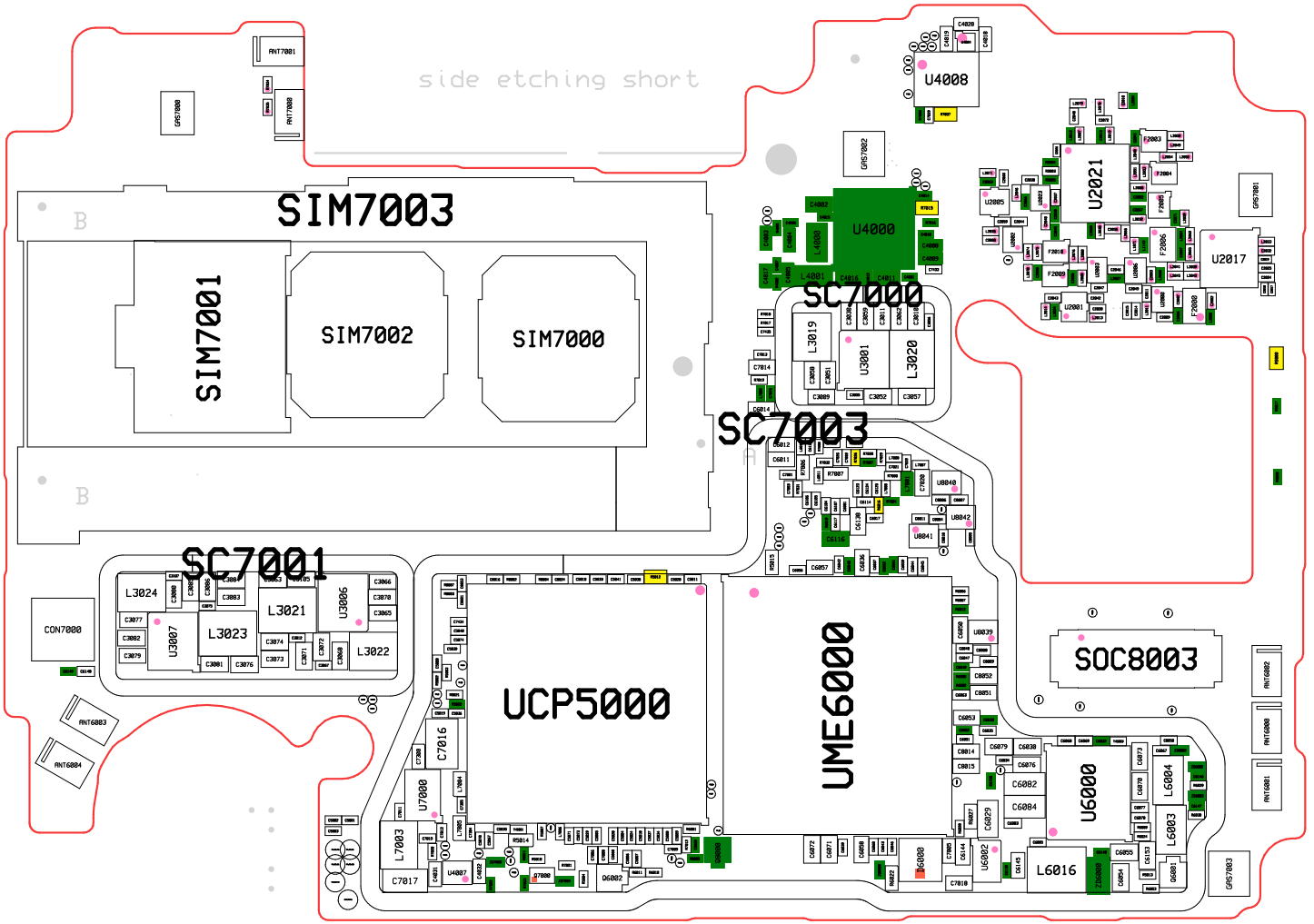
side etching short
SIM7003
SIM7001
SIM7002
SIM7000
SC7000
SC7003
SC7001
UCP5000
UME6000
SOC8003
U6000
U4000
U4008
U2021
U2017
CON7000
ANT7001
ANT7000
ANT6003
ANT6004
ANT6002
ANT6000
ANT6001
GRS7000
GRS7002
GRS7001
GRS7003
L3019
U3001
L3020
L3024
L3021
U3006
L3023
U3007
L3022
C7016
U7000
L7003
C7017
L6004
L6003
L6016
JTAG5001
JTAG5000
CN5000